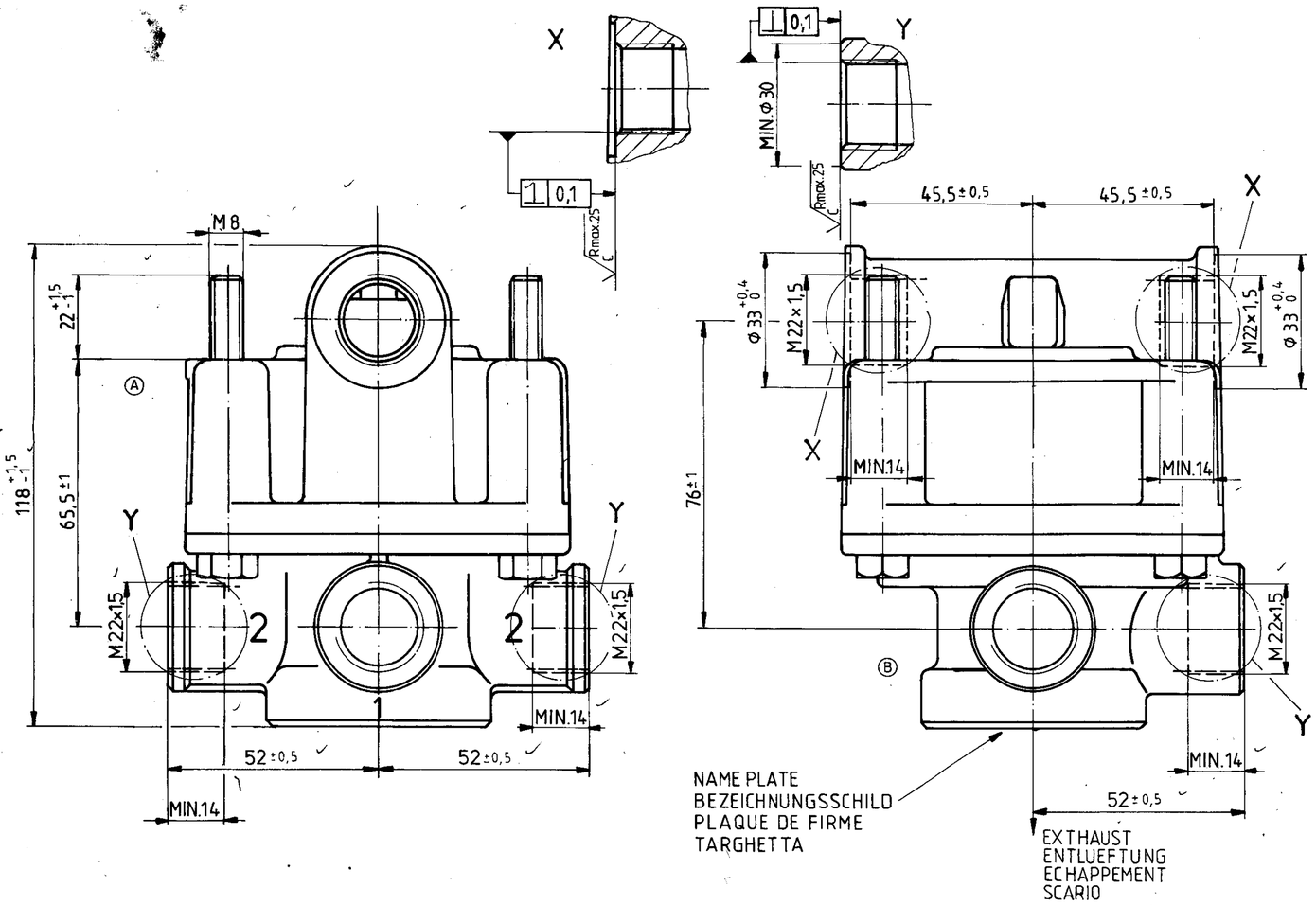

THERMAL RANGE OF APPLICATION
THERMISCHER ANWENDUNGSBEREICH
GAMME D'APPLICATION THERMIQUE
CAMPO DI APPLICAZIONE THERMICA
-40 °C ... +80 °C

WORKING PRESSURE
BETRIEBSDRUCK
PRESSION D'UTILISATION
PRESSIONE DI ESERCIZIO
pe = max 10 bar

FREE PASSAGE
FREIER DURCHGANG
PASSAGE LIBRE
PASSAGGIO LIBERO
max 1,8 cm² ≙ Φ15 mm

1 SUPPLY
VORRAT
ALIMENTATION
ALIMENTAZIONE

2 DELIVERY
AUSGESTEUERTER DRUCK
PRESSION DELIVREE
MANDATA
p 2

41 CONTROL PRESSURE
STEUERDRUCK
PRESSION DE COMMANDE
PRESSIONE DI COMANDO
p 41

42 CONTROL PRESSURE
STEUERDRUCK
PRESSION DE COMMANDE
PRESSIONE DI COMANDO
p 42

MEDIUM: AIR
MEDIUM: LUFT
FLUIDE: AIR
FLUIDO: ARIA

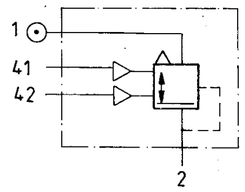

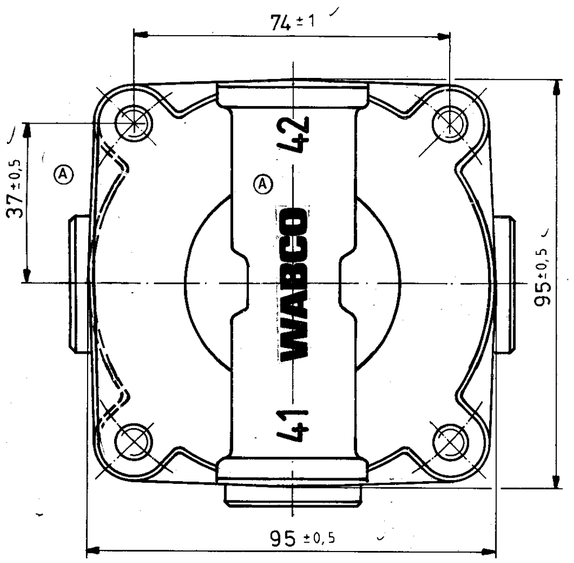

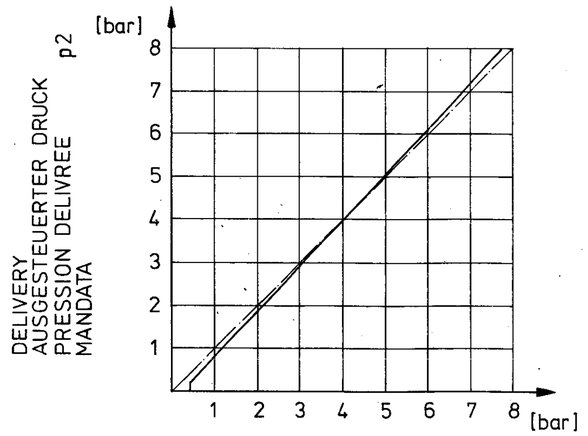

CONTROL PRESSURE
STEUERDRUCK
PRESSION DE COMMANDE
PRESSIONE DI COMANDO
p 41 p 42

TORQUE:
ANZUGSMOMENT: M8 = 24 Nm
COUPLE DE SERRAGE: M22×1,5 = 45 Nm
COPPIA DI SERRAGGIO:

CORROSION RESISTANCE:
KORROSIONSSCHUTZ:
PROTECTION CONTRE LA CORROSION: SK DIN 50 017 ≥ 96h/ISO 3768 ≥ 96h
ANTIRUGGINE:

TAPPED HOLES ACC. ISO 4039 / JED-152
[1]) TOLERANCE CLASS APPLIED CROSSMARKED

050631	1×	B	92-07-16		
47 471	3×	A	91-01-21		
CHANGE NO	LETT		DATE		
REPLACEMENT FOR					

DATE	SIGNATURE
DRAWN 88-11-22	Brink
CHECKED 88-11-22	
STANDARDIZATION 88-11-25	

WABCO
RELAY VALVE
VALVE RELAIS
VALVOLA RELE
RELAIS VENTIL.

MASS	SCALE	IDENTIFICATION CODE	SHEET
1,0 Kg	1:1	473 017 007 0	1/1
SIZE A 2	TRI 140	CODE FOR FUNCTION / CODE FOR SHAPE / CODE FOR DOCUMENT 605	

100 mm.

PLZ 744 TOP 00X

Schleicher · Schull GmbH Einbeck

Toute communication ou reproduction de ce document, toute exploitation ou communication de son contenu sont interdites, sauf autorisation expresse. Tout manquement à cette règle constitue un abus évident et expose son auteur au versement de dommages et intérêts. Tous droits réservés, notamment en matière de brevets et de modèles. Mitteilung ihres Inhalts stellen einen offensichtlichen Mißbrauch dar und verpflichten zu Schadenersatz. Alle Rechte für den Fall der Patenterteilung oder Gebrauchsmuster-Eintragung vorbehalten.

Non è permesso consegnare a terzi o riprodurre questo documento, nè utilizzarne il contenuto o renderlo comunque noto a terzi senza autorizzazione esplicita. Ogni infrazione costituirà un evidente abuso e comporterà il risarcimento dei danni subiti. E' fatta riserva di tutti i diritti derivanti da brevetti o modelli.

Copying of this document, and giving it to others and the use or communication of the contents thereof, are forbidden without express authority. Contravention of this restriction will constitute an evident abuse and result in a liability to the payment of damages. All rights are reserved in the event of the grant of a patent or the registration of an utility model or design.